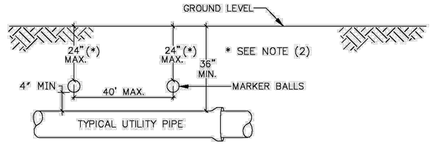

GENERAL NOTES:

1. ALL UTILITY PIPE SHALL BE INSTALLED WITH 4"ø MARKING BALLS PLACED EVERY 40' AND AT EVERY FITTING, FOR IDENTIFICATION AND WARNING PURPOSES, BURIED ABOVE THE PIPE AT A MAXIMUM DEPTH OF 24 INCHES OR AS APPROVED BY THE OWNER. IT SHALL BE COLOR CODED AND WORDED AS FOLLOWS:

   SEWER SYSTEM
   A. COLOR: GREEN
   B. LETTERING: SANITARY SEWER
   C. FREQUENCY OF MARKER BALLS SHALL BE 121.6 Khz.
   D. THE MARKER BALLS CAN BE BURIED IN ANY ORIENTATION.

   THE MARKER BALLS SHALL BE DETECTABLE BY STANDARD METAL DETECTION EQUIPMENT AND SHALL BE MANUFACTURED BY TEMPO OR 3M LOCATOR SYSTEM OR EQUIVALENT (FREQUENCY 121.6 Khz)

2. FOR LARGE DIAMETER PIPE INSTALLED AT DEPTHS BELOW 4'-0" MARKER BALLS SHALL BE PLACED AT A MAXIMUM DEPTH OF 4'-0" BELOW GRADE *.

SEWER PIPE IDENTIFICATION

ENGINEERING STANDARDS 2025

REVISIONS		ENGINEERING DIVISION CITY OF POMPANO BEACH	SEWER PIPE IDENTIFICATION
BY	DATE		DATE: JUNE 2022
S.S.	01/30/12		DWG. NO. 207-1
		SCALE: N.T.S.	

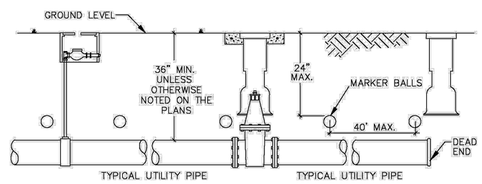

GENERAL NOTES:

1. ALL NONMETALLIC PIPE SHALL BE INSTALLED WITH 12 THHN SOLID COPPER TRACING WIRE.
2. THE MARKER BALLS MUST BE INSTALLED DIRECTLY ABOVE THE PIPE.
3. MARKER BALLS SHALL BE INSTALLED AT 40' O.C.
4. BALL COLOR CODING:
   SANITARY SEWER SYSTEM: GREEN

UTILITY PIPE AND MARKER BALLS LOCATION

ENGINEERING STANDARDS 2025

REVISIONS		ENGINEERING DIVISION CITY OF POMPANO BEACH	UTILITY PIPE AND MARKER BALLS LOCATION
BY	DATE		DATE: JUNE 2022
S.S.	01/30/12		DWG. NO. 208-1
		SCALE: N.T.S.	

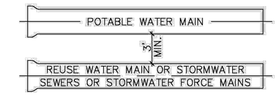

A MINIMUM HORIZONTAL SEPARATION 3' (OUTSIDE TO OUTSIDE), SHALL BE MAINTAINED BETWEEN POTABLE WATER MAINS AND STORMWATER SEWERS, STORMWATER FORCE MAINS AND REGULATED REUSE WATER MAINS.

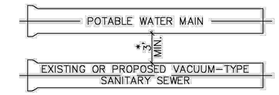

A MINIMUM HORIZONTAL SEPARATION 3' (OUTSIDE TO OUTSIDE), SHALL BE MAINTAINED BETWEEN EXISTING OR PROPOSED VACUUM-TYPE SANITARY SEWER. * SEE NOTE D(1)(B).

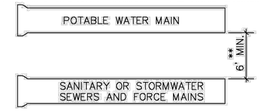

A MINIMUM HORIZONTAL SEPARATION OF 6' (OUTSIDE TO OUTSIDE), SHALL BE MAINTAINED BETWEEN POTABLE WATER MAINS AND EXISTING OR PROPOSED GRAVITY-OR PRESSURE TYPE SANITARY SEWER, WASTEWATER FORCE MAIN OR NOT REGULATED REUSE WATER MAIN. ** SEE NOTE D(1)(C).

MINIMUM HORIZONTAL SEPARATION REQUIREMENTS FOR POTABLE WATER, REUSE, STORMWATER AND SEWER LINES

ENGINEERING STANDARDS 2025

REVISIONS		ENGINEERING DIVISION CITY OF POMPANO BEACH	MIN. HORIZONTAL SEPARATION FOR SANITARY SEWER
BY	DATE		DATE: JUNE 2022
S.S.	01/30/12		DWG. NO. 209-1
		SCALE: N.T.S.	

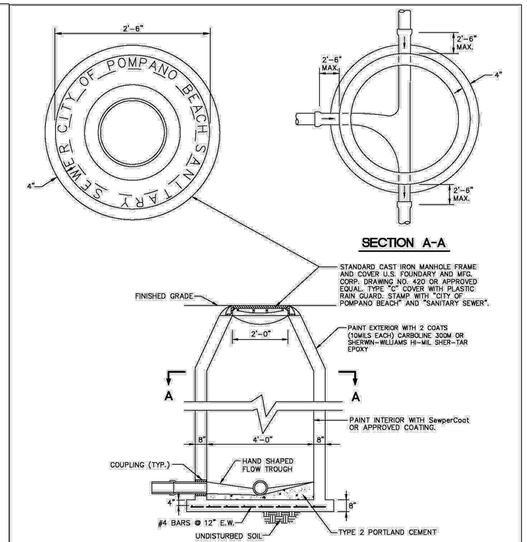

STANDARD MANHOLE
TO BE USED WHERE DEPTH EXCEEDS 4' FEET

ENGINEERING STANDARDS 2025

REVISIONS		ENGINEERING DIVISION CITY OF POMPANO BEACH	STANDARD MANHOLE
BY	DATE		DATE: JUNE 2022
S.S.	JUNE 2005		DWG. NO. 215-1
T.W.	11-2007		
S.S.	12-2013	SCALE: N.T.S.	
A.S.	09-2021		

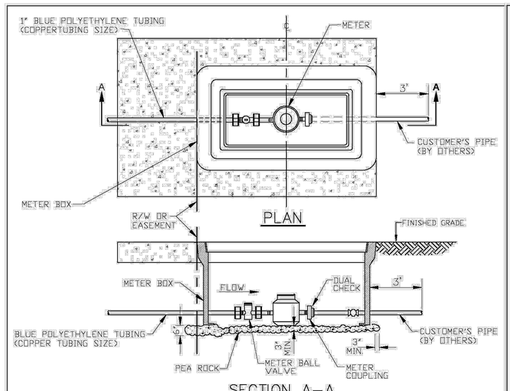

NOTES:

1. ALL METERS WILL BE SUPPLIED AND INSTALLED BY COPB UTILITIES. METER HAS IRON PIPE THREAD MALE CONNECTION ON EACH END.
2. METER SHALL BE CENTERED IN BOX.
3. DUAL CHECK IS SAME SIZE AS CUSTOMER'S SERVICE LINE.

METER SIZE	LAYING LENGTH (IN)	HEIGHT (IN)
5/8"	7.5	4.56
1"	10.75	5.75

METER BOX INSTALLATION

ENGINEERING STANDARDS 2025

REVISIONS		ENGINEERING DIVISION CITY OF POMPANO BEACH	METER BOX INSTALLATION FOR 5/8" AND 1" METERS
BY	DATE		DATE: JAN. 2022
S.S.	11-2012		DWG. NO. 105-2
		SCALE: N.T.S.	

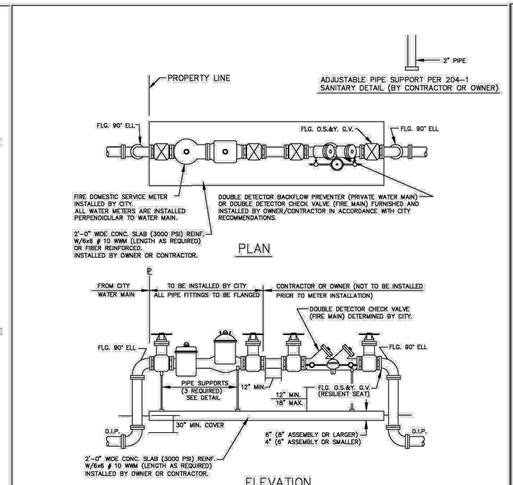

FIRE ONLY METER AND BACKFLOW DEVICE DETAILS

NOTES

1. THE BACKFLOW PREVENTOR FOR THE BY-PASS SHALL BE DDCV OR RPZ.
2. PLEASE NOTE THAT WATER METERS 3" AND LARGER ARE SUBJECT TO AN APPROXIMATE ORDER LEAD TIME OF 60 TO 75 DAYS AFTER FULL PAYMENT. PLEASE CONTACT CUSTOMER SERVICE AT 954-786-4637 TO ARRANGE FOR METER PROCUREMENT AND INSTALLATION.
3. USE MEGALUGS AT ALL PIPE JOINTS
4. PLEASE SEE METER INSTALL DIMENSION LIST ON STANDARD NO. 106-4

ENGINEERING STANDARDS 2025

REVISIONS		ENGINEERING DIVISION CITY OF POMPANO BEACH	FIRE ONLY METER AND BACKFLOW DEVICE
BY	DATE		DATE: MAY 2022
S.S.	05-2011		DWG. NO. 106-3
S.S.	11-2012		
S.S.	12-2013	SCALE: N.T.S.	
S.S.	11-2016		

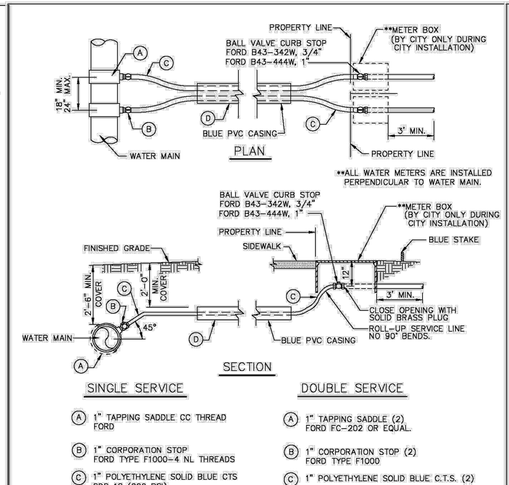

SINGLE SERVICE

- (A) 1" TAPPING SADDLE CC THREAD FORD
- (B) 1" CORPORATION STOP FORD TYPE F1000-4 NL THREADS
- (C) 1" POLYETHYLENE SOLID BLUE CTS SDR 18 (200 PSI)
- (D) 1 1/2" SCH. 40 FOR 1" SERVICE 2 1/2" SCH. 40 FOR 2" SERVICE PAINTED BLUE

DOUBLE SERVICE

- (A) 1" TAPPING SADDLE (2) FORD FC-202 OR EQUAL.
- (B) 1" CORPORATION STOP (2) FORD TYPE F1000
- (C) 1" POLYETHYLENE SOLID BLUE C.T.S. (2)
- (D) 2 1/2" SCH. 40 FOR 1" SERVICE 6" SCH. 40 FOR 2" SERVICE PAINTED BLUE

TYPICAL 3/4" AND 1" WATER SERVICE

ENGINEERING STANDARDS 2025

REVISIONS		ENGINEERING DIVISION CITY OF POMPANO BEACH	TYPICAL 1" WATER SERVICE
BY	DATE		DATE: MAY 2022
T.W.	11-2007		DWG. NO. 107-1
S.S.	05-2012		
S.S.	11-2015	SCALE: N.T.S.	
A.S.	08-2021		

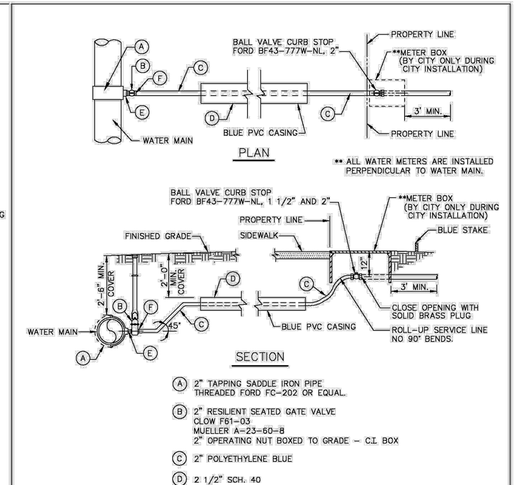

- (A) 2" TAPPING SADDLE IRON PIPE THREADED FORD FC-202 OR EQUAL.
- (B) 2" RESILIENT SEATED GATE VALVE CLOW F61-03 MUELLER A-23-60-B 2" OPERATING NUT BOXED TO GRADE - C.I. BOX
- (C) 2" POLYETHYLENE BLUE
- (D) 2 1/2" SCH. 40
- (E) 2" X 3" BRASS NIPPLE
- (F) 2" MIP COUPLING C-84-77 - PACK JOINT - CTS

TYPICAL 1 1/2' AND 2" WATER SERVICE

ENGINEERING STANDARDS 2025

REVISIONS		ENGINEERING DIVISION CITY OF POMPANO BEACH	TYPICAL 2" WATER SERVICE
BY	DATE		DATE: APRIL 2022
S.S.	05-2011		DWG. NO. 107-2
S.S.	05-2012		
S.S.	11-2018	SCALE: N.T.S.	
A.S.	08-2021		

DRC
PZ26-12000001
05/20/2026

KEITH
2055 East Atlantic Blvd.
Pompano Beach, FL 33060
PH: (954) 788-3400
Florida Engineering Business License: CA7928
Florida Surveyor and Mapper Business License: LB6860
Florida Landscape Architecture Business License: LC26000457

REVISIONS

NO.	DESCRIPTION	DATE

PRELIMINARY PLAN NOT FOR CONSTRUCTION

THESE PLANS ARE NOT FULLY PERMITTED AND ARE SUBJECT TO REVISIONS MADE DURING THE PERMITTING PROCESS.

RESPONSIBILITY FOR THE USE OF THESE PLANS PRIOR TO OBTAINING PERMITS FROM ALL AGENCIES HAVING JURISDICTION OVER THE PROJECT WILL FALL SOLELY UPON THE USER.

ISSUE DATE:	02/25/2026
DESIGNED BY:	CA
DRAWN BY:	BN
CHECKED BY:	CA
BID-CONTRACT:	

This item has been digitally signed and sealed by CHRISTOPHER T. ANDREONI, P.E. on the date adjacent to the seal. Signature must be verified on any electronic copies.

CHRISTOPHER T. ANDREONI LICENSE No. 84184 STATE OF FLORIDA PROFESSIONAL ENGINEER

2026.04.10 16:09:29-04'00'

CHRISTOPHER T. ANDREONI, P.E.
FLORIDA REG. NO. 84184
(FOR THE FIRM)

CLIENT

RP POMPANO LLC

PROJECT

DOWNTOWN POMPANO - PHASE 1 - INFRASTRUCTURE IMPROVEMENTS

SHEET TITLE

WATER AND SEWER DETAILS

SHEET NUMBER CU-504

PROJECT NUMBER 15083.00

Plotted by: dellas On 4/9/2026 3:11 PM

Drawing name: H:\15083.00 - Downtown Pompano - RP Development LLC\Engineering\Cadd\Phase I (Infrastructure)\15083.00-CU-5XX-PH1.dwg

STATUS: PRELIMINARY

DRC
PZ26-12000001
08/05/2026